# Modul Drain **MD45**

WATER DRAINAGE INNOVATION AND DESIGN

**UNDER CONSTRUCTION**

A NEW SYSTEM FOR THE DRAINAGE OF WATER FROM TILED TERRACES, INSTALLED WITH TILED SKIRTINGS, THE MOST POPULAR INSTALLATION SOLUTION.

The **Modul Drain** system comprises two separate elements fixed with two foldaway screws; it allows the tube length to be altered on site to meet the particular requirements of the installation. The fixing plate, with improved anchorage, is in line with the most common tiles thickness and features a calibrated hole, in which to insert the flow tube after having it cut to size.

Anodised aluminium tube diameter of 45mm with a length of 45 cm, with a tapered end, coupled with a bearing plate of different thickness, to be used as a normal ceramic tile for perimeter skirting boards.

Patent pending

# E Series Roundjolly RJE

CO-EXTRUDED, ADVANCED TECHNOLOGY

**THE RANGE IS EXTENDED WITH THE NEW 12.5 mm HEIGHT**

The exclusive **E** series production system allows a synthetic resin profiles production composed by the simultaneous extrusion of two different resin polymers.

**E**= Extra-checked on the visible part keeping all the characteristics

**E**= Extra-strong due to the material composition and form

**E**= Extraordinary patented production process

**E**= Ecological – for the total “on line” re-use of the perforated flanges

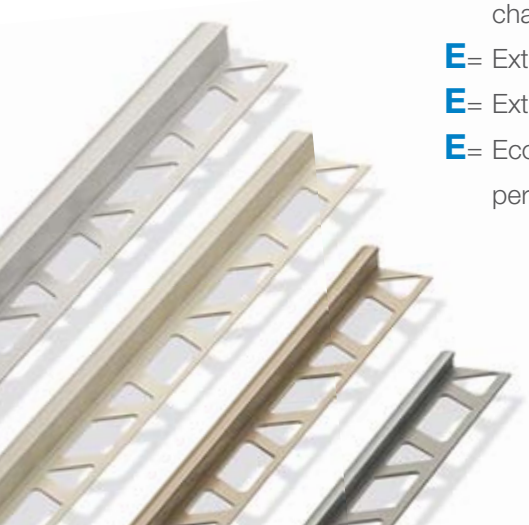

Patent Pending

**MD 45**

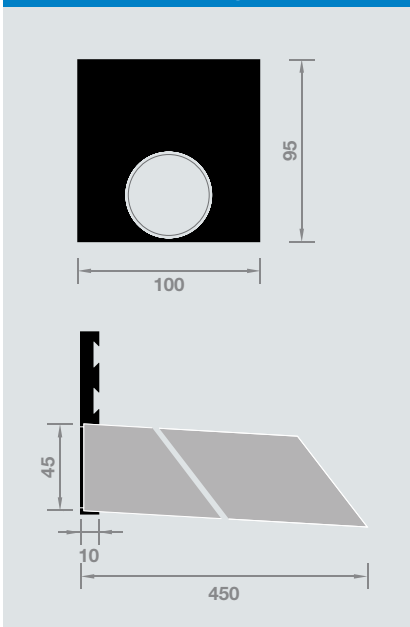


# PS 130

## EXTRUDED ALUMINIUM PROFILE

Plasterboard is the preferred material of the modern construction industry for both residential and commercial buildings. The new and unique anodised aluminium profile **PS 130**, has been designed to work with plasterboard installations as both a finishing and decorative element for an added value. This new profile is ideal for use with this type of substrate both as a **negative jolly** providing a modern minimalist effect with the option of joining it to the floor with the skirting board series BF or as a **decorative ceiling gap**, in line with the latest design trends.

The visible section of 13mm x 13mm perfectly fits with the most popular plasterboard thicknesses.

**PS 130 CEILING**

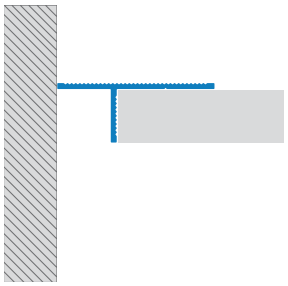
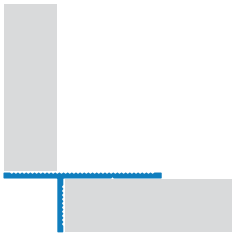
**PS 130 WALL CORNER**